IZO PANEL

COLD-FORMED PROFILES

Catalogue 2023

Table of contents

Izopanel cold-formed section bars	3
Cold-formed section bars geometric profiling options	4
Z- and C-shaped basic section bars	5
Z-shaped section bar	6
C-shaped section bar	7
Z-shaped section bar cross-section geometry	8
Z-shaped section bar used to form continuous beams	10
Z-shaped section bar Hole pattern	11
Z-shaped section bar used to form purlins	12
Construction diagram for purlins	12
Z-shaped section bar used to form purlins	13
Z-shaped section bar braces for purlins	14
C-shaped section bar cross-section geometry	15
C-shaped section barused to form continuous beams	17
C-shaped section bar hole pattern	18

Izopanel cold-formed section bars

Due to their properties, cold-formed section bars are widely applied in modern construction while providing an attractive alternative to hot-rolled profiles. They are used, among others, in:

- load-bearing structures of lightweight halls,
- roof purlins,
- wall transoms,
- curtain and partition wall structures,
- installations, furniture and many other areas.

Izopanel Sp. z o.o. is able to produce customised profiles based on materials with their yield strengths ranging from 280 MPa to 550 MPa.

Feel invited to cooperate with us and purchase our first branded cold-formed section bars.

Cold-formed section bars

geometric profiling options

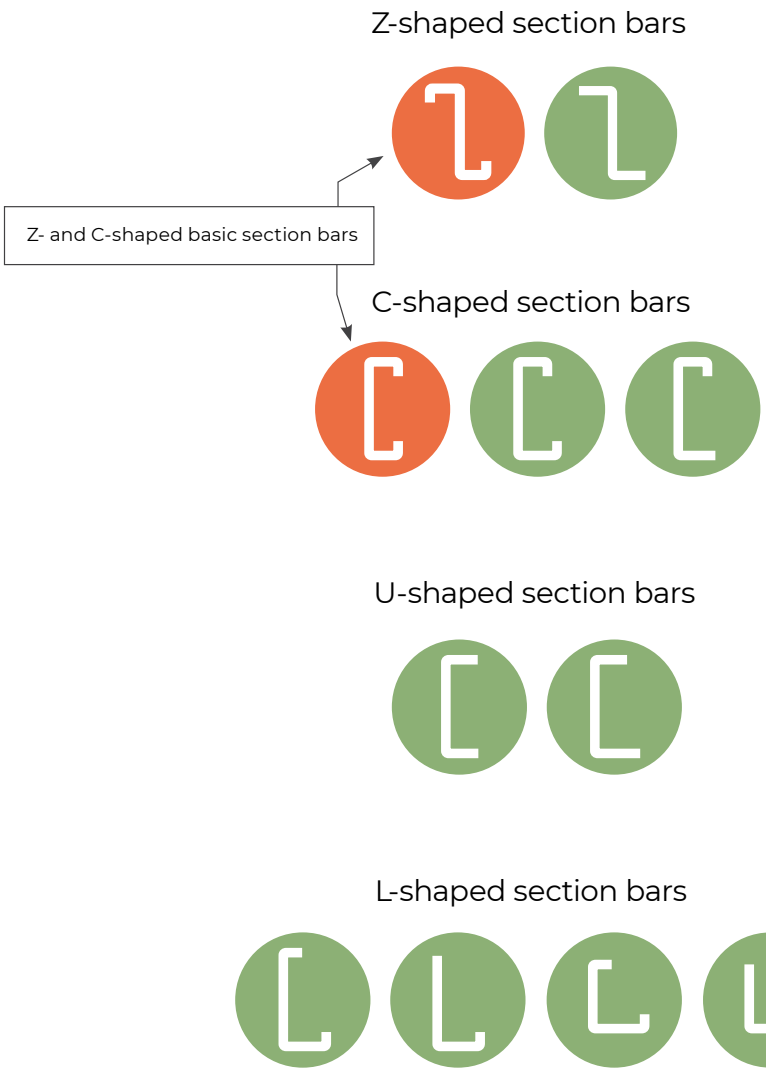

Fig. 1

Geometric profiling options for Z-, C- and U-shaped section bars

Cross-section element	Options
Thickness	1,2 ÷ 3,2 mm
Web	100 ÷ 400 mm
Flange with no bend	13 ÷ 100 mm
Bended flange	48 ÷ 100 mm
Bend	13 ÷ 30 mm

tab. 1

Geometric profiling options for L-shaped section bar

Cross-section element	Options
Thickness	1,2 ÷ 3,2 mm
Flange „1” with no bend	13 ÷ 100 mm
Flange „2” with no bend	40 ÷ 400 mm
Bended flange „1”	48 ÷ 100 mm
Bended flange „2”	100 ÷ 400 mm
Bend at flange „1”	13 ÷ 30 mm
Bend at flange „2”	13 ÷ 100 mm

tab. 2

Z- and C-shaped section bars

Z- and C-shaped basic section bars

The cold-formed profiles produced by us are mainly used in roof purlins and wall transoms. Cold-formed section bars (being relatively lightly loaded second-tier load-bearing elements) are ideal components to make such elements.

The optimised geometry of these section bars results in a high strength-to-weight index of each element. Galvanised profiles (section bars) made of S350GD+Z steel are the most commonly used.

Apart from section bars listed in the basic program, we also offer the possibility of producing individually customised section bars. For their production we also make use of other aterials with their yield strength ranging from 280 MPa to 550 MPa (also supplied by the customer), in any height from 100 mm ÷ 400 mm, made of black and galvanised sheet metal, with any hole pattern, in lengths of up to 15 m.

Z-shaped section bar

C-shaped section bar

Z-shaped section bar

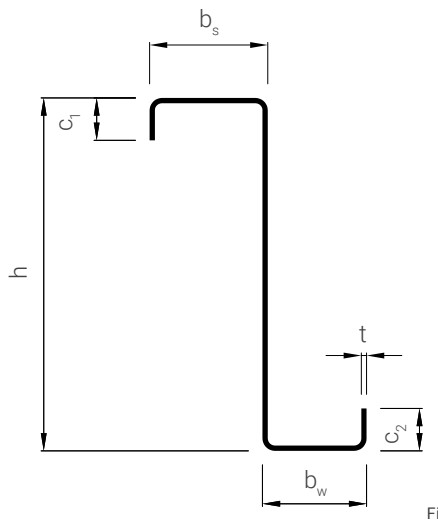

Fig. 2

h [mm]	t [mm]	b_w [mm]	b_s [mm]	c_1 [mm]	c_2 [mm]	m [kg/mb]
100	1,5	49,0	54,0	17,0	15,0	2,64
	2,0	49,0	56,0	17,0	15,0	3,51
	2,5	49,0	56,0	17,0	15,0	4,32
	1,5	60,0	65,0	20,0	20,0	3,01
	2,0	60,0	66,0	21,0	21,0	4,01
	2,5	60,0	67,0	20,0	20,0	4,93
150	1,5	49,0	54,0	17,0	15,0	3,24
	2,0	49,0	56,0	17,0	15,0	4,31
	2,5	49,0	56,0	17,0	15,0	5,32
	1,5	60,0	65,0	20,0	20,0	3,61
	2,0	60,0	66,0	21,0	21,0	4,80
	2,5	60,0	67,0	20,0	20,0	5,93
175	1,5	49,0	54,0	17,0	15,0	3,55
	2,0	49,0	56,0	17,0	15,0	4,71
	2,5	49,0	56,0	17,0	15,0	5,82
	1,5	60,0	65,0	20,0	20,0	3,91
	2,0	60,0	66,0	21,0	21,0	5,21
	2,5	60,0	67,0	20,0	20,0	6,43
200	1,5	49,0	54,0	17,0	15,0	3,85
	2,0	49,0	56,0	17,0	15,0	5,11
	2,5	49,0	56,0	17,0	15,0	6,32
	3,0	49,0	57,0	17,0	15,0	7,54
	1,5	60,0	65,0	20,0	20,0	4,20
	2,0	60,0	66,0	21,0	21,0	5,61
	2,5	60,0	67,0	20,0	20,0	6,93
	3,0	60,0	68,0	21,0	21,0	8,31
225	1,5	60,0	65,0	20,0	20,0	4,51
	2,0	60,0	66,0	21,0	21,0	6,01
	2,5	60,0	67,0	20,0	20,0	7,43
	3,0	60,0	68,0	21,0	21,0	8,91
	1,5	65,0	70,0	23,0	23,0	4,70
	2,0	65,0	71,0	23,0	23,0	6,23
	2,5	65,0	73,0	22,0	22,0	7,73
	3,0	65,0	74,0	23,0	23,0	9,27
	2,0	75,0	81,0	23,0	23,0	6,55
	2,5	75,0	82,0	22,0	22,0	8,11
	3,0	75,0	83,0	23,0	23,0	9,73
250	1,5	60,0	65,0	20,0	20,0	4,80
	2,0	60,0	66,0	21,0	21,0	6,41
	2,5	60,0	67,0	20,0	20,0	7,93
	3,0	60,0	68,0	21,0	21,0	9,51
	1,5	65,0	70,0	23,0	23,0	5,00
	2,0	65,0	71,0	23,0	23,0	6,63
	2,5	65,0	73,0	22,0	22,0	8,23
	3,0	65,0	74,0	23,0	23,0	9,87
	2,0	75,0	81,0	23,0	23,0	6,96
	2,5	75,0	82,0	22,0	22,0	8,61
	3,0	75,0	83,0	23,0	23,0	10,33
275	2,0	60,0	66,0	21,0	21,0	6,81
	2,5	60,0	67,0	20,0	20,0	8,43
	3,0	60,0	68,0	21,0	21,0	10,11
	2,0	65,0	71,0	23,0	23,0	7,03
	2,5	65,0	73,0	22,0	22,0	8,73
	3,0	65,0	74,0	23,0	23,0	10,48
	2,0	75,0	81,0	23,0	23,0	7,35
	2,5	75,0	82,0	22,0	22,0	9,11
	3,0	75,0	83,0	23,0	23,0	10,92
300	2,0	65,0	71,0	23,0	23,0	7,44
	2,5	65,0	73,0	22,0	22,0	9,23
	3,0	65,0	74,0	23,0	23,0	11,08
	2,0	75,0	81,0	23,0	23,0	7,75
	2,5	75,0	82,0	22,0	22,0	9,61
	3,0	75,0	83,0	23,0	23,0	11,53
	2,0	92,0	100,0	31,0	31,0	8,59
	2,5	92,0	100,0	30,0	30,0	10,63
	3,0	92,0	100,0	31,0	31,0	12,73
350	2,0	75,0	81,0	23,0	23,0	8,56
	2,5	75,0	82,0	22,0	22,0	10,61
	3,0	75,0	83,0	23,0	23,0	12,73
	2,0	92,0	100,0	31,0	31,0	9,38
	2,5	92,0	100,0	30,0	30,0	11,63
	3,0	92,0	100,0	31,0	31,0	13,93
400	2,0	75,0	81,0	23,0	23,0	9,35
	2,5	75,0	82,0	22,0	22,0	11,61
	3,0	75,0	83,0	23,0	23,0	13,93
	2,0	92,0	100,0	31,0	31,0	10,19
	2,5	92,0	100,0	30,0	30,0	12,64
	3,0	92,0	100,0	31,0	31,0	15,14

tab. 3

C-shaped section bar

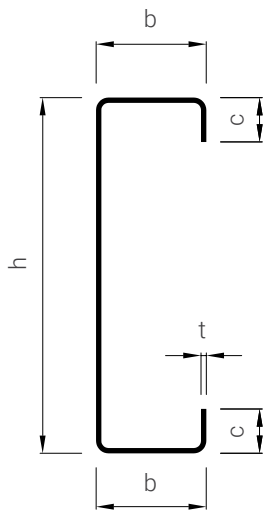

Fig. 3

h [mm]	t [mm]	b [mm]	c [mm]	m [kg/mb]
100	1,5	51,0	17,0	2,66
	2,0	52,0	17,0	3,53
	2,5	51,0	17,0	4,30
	1,5	59,0	23,0	3,00
	2,0	60,0	24,0	4,01
	2,5	60,0	23,0	4,91
150	1,5	51,0	17,0	3,25
	2,0	52,0	17,0	4,32
	2,5	51,0	17,0	5,30
	1,5	59,0	23,0	3,59
	2,0	60,0	24,0	4,80
	2,5	60,0	23,0	5,91
175	1,5	51,0	17,0	3,56
	2,0	52,0	17,0	4,72
	2,5	51,0	17,0	5,80
	1,5	59,0	23,0	3,90
	2,0	60,0	24,0	5,21
	2,5	60,0	23,0	6,41
200	1,5	51,0	17,0	3,86
	2,0	52,0	17,0	5,13
	2,5	51,0	17,0	6,30
	3,0	52,0	17,0	7,54
	1,5	59,0	23,0	4,19
	2,0	60,0	24,0	5,61
	2,5	60,0	23,0	6,91
	3,0	62,0	23,0	8,31
225	1,5	59,0	23,0	4,50
	2,0	60,0	24,0	6,01
	2,5	60,0	23,0	7,41
	3,0	62,0	23,0	8,91
	1,5	65,0	25,0	4,69
	2,0	66,0	25,0	6,23
	2,5	66,0	25,0	7,73
	3,0	67,0	25,0	9,25
	2,0	74,0	27,0	6,55
	2,5	73,0	27,0	8,09
	3,0	74,0	28,0	9,73
250	1,5	59,0	23,0	4,79
	2,0	60,0	24,0	6,41
	2,5	60,0	23,0	7,91
	3,0	62,0	23,0	9,51
	1,5	65,0	25,0	4,99
	2,0	66,0	25,0	6,63
	2,5	66,0	25,0	8,23
	3,0	67,0	25,0	9,84
	2,0	74,0	27,0	6,96
	2,5	73,0	27,0	8,59
	3,0	74,0	28,0	10,33
275	2,0	60,0	24,0	6,81
	2,5	60,0	23,0	8,40
	3,0	62,0	23,0	10,11
	2,0	66,0	25,0	7,03
	2,5	66,0	25,0	8,73
	3,0	67,0	25,0	10,44
	2,0	74,0	27,0	7,35
	2,5	73,0	27,0	9,09
	3,0	74,0	28,0	10,92
300	2,0	66,0	25,0	7,44
	2,5	66,0	25,0	9,23
	3,0	67,0	25,0	11,05
	2,0	74,0	27,0	7,75
	2,5	73,0	27,0	9,59
	3,0	74,0	28,0	11,53
	2,0	97,0	30,0	8,59
	2,5	96,0	30,0	10,63
	3,0	97,0	30,0	12,73
350	2,0	74,0	27,0	8,56
	2,5	73,0	27,0	10,59
	3,0	74,0	28,0	12,73
	2,0	97,0	30,0	9,38
	2,5	96,0	30,0	11,63
	3,0	97,0	30,0	13,93
400	2,0	74,0	27,0	9,35
	2,5	73,0	27,0	11,59
	3,0	74,0	28,0	13,93
	2,0	97,0	30,0	10,19
	2,5	96,0	30,0	12,64
	3,0	97,0	30,0	15,14

tab. 4

Z-shaped section bar

cross-section geometry

The section bars on offer are labelled with the B construction mark. The production programme is commonly used for purlins and transoms in steel halls.

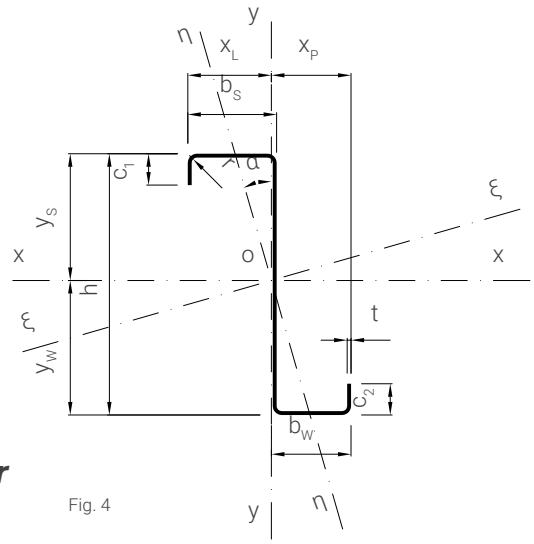

Fig. 4

Table of geometric specification for cross-sections

h	t	b_W	b_S	c_1	c_2	r	A	y_S	y_W	x_L	x_P	I_X	I_Y	I_{XY}	i_X	i_Y	W_{XD}	W_{XG}	W_{YL}	W_{YP}	α
[mm]	[mm]	[mm]	[mm]	[mm]	[mm]	[mm]	[cm²]	[mm]	[mm]	[mm]	[mm]	[cm⁴]	[cm⁴]	[cm⁴]	[cm]	[cm]	[cm³]	[cm³]	[cm³]	[cm³]	[°]
100	1,5	49,0	54,0	17,0	15,0	3,0	3,34	49	51	51	50	54,8	23,4	27,2	4,0	2,6	10,7	11,3	4,6	4,7	30
	2,0	49,0	56,0	17,0	15,0	3,0	4,49	48	52	53	50	73,0	32,0	36,8	4,0	2,7	14,1	15,1	6,1	6,3	30
	2,5	49,0	56,0	17,0	15,0	4,0	5,58	48	52	52	50	89,8	38,9	44,9	4,0	2,6	17,3	18,6	7,4	7,8	30
	1,5	60,0	65,0	20,0	20,0	3,0	3,78	49	51	63	61	63,8	43,1	40,3	4,1	3,4	12,5	13,0	6,9	7,1	38
	2,0	60,0	66,0	21,0	21,0	3,0	5,10	49	51	63	61	84,9	58,9	54,4	4,1	3,4	16,6	17,4	9,3	9,7	38
	2,5	60,0	67,0	20,0	20,0	4,0	6,32	49	51	64	61	104,8	71,8	66,7	4,1	3,4	20,4	21,5	11,3	11,8	38
150	1,5	49,0	54,0	17,0	15,0	3,0	4,07	73	77	52	50	140,0	23,4	41,9	5,9	2,4	18,3	19,1	4,5	4,7	18
	2,0	49,0	56,0	17,0	15,0	3,0	5,47	73	77	53	50	187,2	32,1	56,7	5,9	2,4	24,2	25,7	6,1	6,4	18
	2,5	49,0	56,0	17,0	15,0	4,0	6,81	73	77	53	50	231,3	39,0	69,4	5,8	2,4	29,9	31,8	7,4	7,8	18
	1,5	60,0	65,0	20,0	20,0	3,0	4,51	74	76	63	61	161,6	43,1	62,5	6,0	3,1	21,2	21,9	6,8	7,1	23
	2,0	60,0	66,0	21,0	21,0	3,0	6,08	74	76	63	61	216,1	59,0	84,6	6,0	3,1	28,3	29,4	9,3	9,7	24
	2,5	60,0	67,0	20,0	20,0	4,0	7,55	73	77	64	61	267,3	71,8	103,7	5,9	3,1	34,9	36,5	11,2	11,9	23
175	1,5	49,0	54,0	17,0	15,0	3,0	4,44	86	89	52	50	201,2	23,4	49,3	6,7	2,3	22,5	23,5	4,5	4,7	15
	2,0	49,0	56,0	17,0	15,0	3,0	5,96	85	90	53	50	269,1	32,1	66,7	6,7	2,3	29,9	31,7	6,0	6,4	15
	2,5	49,0	56,0	17,0	15,0	4,0	7,43	85	90	53	50	333,0	39,0	81,7	6,7	2,3	37,0	39,2	7,4	7,9	15
	1,5	60,0	65,0	20,0	20,0	3,0	4,88	86	89	63	60	231,1	43,1	73,6	6,9	3,0	26,0	26,8	6,8	7,1	19
	2,0	60,0	66,0	21,0	21,0	3,0	6,57	86	89	64	60	309,5	59,0	99,7	6,9	3,0	34,8	36,0	9,3	9,8	19
	2,5	60,0	67,0	20,0	20,0	4,0	8,17	86	89	64	60	383,0	71,8	122,2	6,8	3,0	42,9	44,7	11,2	11,9	19
200	1,5	49,0	54,0	17,0	15,0	3,0	4,80	98	102	52	50	276,2	23,4	56,6	7,6	2,2	27,1	28,2	4,5	4,7	12
	2,0	49,0	56,0	17,0	15,0	3,0	6,45	97	103	53	50	369,7	32,1	76,7	7,6	2,2	36,0	38,0	6,0	6,5	12
	2,5	49,0	56,0	17,0	15,0	4,0	8,04	97	103	53	49	458,0	39,0	94,0	7,5	2,2	44,6	47,0	7,4	7,9	12
	3,0	49,0	57,0	17,0	15,0	4,0	9,65	97	103	54	49	546,5	46,7	112,2	7,5	2,2	53,1	56,3	8,7	9,5	12
	1,5	60,0	65,0	20,0	20,0	3,0	5,24	99	101	63	60	315,8	43,1	84,7	7,8	2,9	31,2	32,0	6,8	7,1	16
	2,0	60,0	66,0	21,0	21,0	3,0	7,06	98	102	64	60	423,3	59,0	114,8	7,7	2,9	41,7	43,1	9,3	9,8	16
	2,5	60,0	67,0	20,0	20,0	4,0	8,78	98	102	64	60	524,2	71,8	140,7	7,7	2,9	51,4	53,5	11,2	11,9	16
	3,0	60,0	68,0	21,0	21,0	4,0	10,63	98	102	65	60	631,5	89,4	172,5	7,7	2,9	61,7	64,7	13,9	14,8	16
225	1,5	60,0	65,0	20,0	20,0	3,0	5,61	111	114	63	60	417,0	43,1	95,7	8,6	2,8	36,6	37,6	6,8	7,2	14
	2,0	60,0	66,0	21,0	21,0	3,0	7,55	111	114	64	60	559,2	59,0	129,9	8,6	2,8	49,0	50,5	9,3	9,8	14
	2,5	60,0	67,0	20,0	20,0	4,0	9,40	110	115	64	60	692,9	71,9	159,2	8,6	2,8	60,5	62,7	11,2	11,9	14
	3,0	60,0	68,0	21,0	21,0	4,0	11,34	110	115	65	60	832,9	88,2	193,6	8,6	2,8	72,6	75,6	13,6	14,7	14
	1,5	65,0	70,0	23,0	23,0	3,0	5,84	111	114	68	65	442,4	56,4	114,2	8,7	3,1	38,9	39,8	8,3	8,6	15
	2,0	65,0	71,0	23,0	23,0	3,0	7,82	111	114	69	65	590,0	75,3	152,4	8,7	3,1	51,7	53,2	11,0	11,5	15
	2,5	65,0	73,0	22,0	22,0	4,0	9,77	110	115	70	65	734,5	93,8	189,6	8,7	3,1	64,0	66,6	13,4	14,3	15
	3,0	65,0	74,0	23,0	23,0	4,0	11,78	110	115	70	65	882,6	115,0	230,2	8,7	3,1	76,8	80,3	16,3	17,6	15
	2,0	75,0	81,0	23,0	23,0	3,0	8,21	111	114	79	75	638,8	107,4	192,1	8,8	3,6	56,0	57,6	13,7	14,2	18
	2,5	75,0	82,0	22,0	22,0	4,0	10,23	111	114	79	75	792,5	131,3	236,4	8,8	3,6	69,3	71,6	16,6	17,4	18
	3,0	75,0	83,0	23,0	23,0	4,0	12,34	110	115	80	75	952,1	160,7	286,8	8,8	3,6	83,1	86,3	20,2	21,3	18

Continued table on the next page

tab. 5.1

h	t	b_W	b_S	c_1	c_2	r	A	y_S	y_W	x_L	x_P	I_X	I_Y	I_{XY}	i_X	i_Y	W_{XD}	W_{XG}	W_{YL}	W_{YP}	α
[mm]	[mm]	[mm]	[mm]	[mm]	[mm]	[mm]	[cm²]	[mm]	[mm]	[mm]	[mm]	[cm⁴]	[cm⁴]	[cm⁴]	[cm]	[cm]	[cm³]	[cm³]	[cm³]	[cm³]	[°]
250	1,5	60,0	65,0	20,0	20,0	3,0	5,97	123	126	63	60	535,6	43,1	106,8	9,5	2,7	42,3	43,4	6,8	7,2	12
	2,0	60,0	66,0	21,0	21,0	3,0	8,04	123	127	64	60	718,7	59,0	145,0	9,5	2,7	56,7	58,4	9,3	9,8	12
	2,5	60,0	67,0	20,0	20,0	4,0	10,01	123	127	64	60	890,9	71,9	177,7	9,4	2,7	70,1	72,5	11,2	12,0	12
	3,0	60,0	68,0	21,0	21,0	4,0	12,08	123	127	65	60	1071,5	88,3	216,2	9,4	2,7	84,1	87,4	13,6	14,7	12
	1,5	65,0	70,0	23,0	23,0	3,0	6,21	124	126	68	65	567,5	56,4	127,5	9,6	3,0	44,9	45,9	8,3	8,6	13
	2,0	65,0	71,0	23,0	23,0	3,0	8,31	123	127	69	65	757,2	75,3	170,2	9,5	3,0	59,7	61,4	11,0	11,5	13
	2,5	65,0	73,0	22,0	22,0	4,0	10,38	123	127	70	65	942,9	93,8	211,7	9,5	3,0	74,1	76,9	13,4	14,3	13
	3,0	65,0	74,0	23,0	23,0	4,0	12,52	122	128	71	65	1133,6	115,0	257,2	9,5	3,0	88,8	92,7	16,3	17,6	13
	2,0	75,0	81,0	23,0	23,0	3,0	8,70	123	127	79	75	817,4	107,4	214,5	9,7	3,5	64,5	66,3	13,7	14,3	16
	2,5	75,0	82,0	22,0	22,0	4,0	10,85	123	127	79	75	1014,6	131,3	263,8	9,7	3,5	79,9	82,5	16,6	17,4	15
	3,0	75,0	83,0	23,0	23,0	4,0	13,08	123	127	80	75	1219,6	160,7	320,3	9,7	3,5	95,9	99,4	20,2	21,4	16
275	2,0	60,0	66,0	21,0	21,0	3,0	8,53	136	139	64	60	903,3	59,0	160,1	10,3	2,6	64,8	66,6	9,2	9,8	10
	2,5	60,0	67,0	20,0	20,0	4,0	10,63	135	140	64	60	1120,2	71,9	196,2	10,3	2,6	80,2	82,8	11,2	12,0	10
	3,0	60,0	68,0	21,0	21,0	4,0	12,82	135	140	65	60	1347,9	88,3	238,9	10,3	2,6	96,3	99,9	13,6	14,7	10
	2,0	65,0	71,0	23,0	23,0	3,0	8,80	136	139	69	65	950,3	75,3	188,0	10,4	2,9	68,2	70,1	11,0	11,6	12
	2,5	65,0	73,0	22,0	22,0	4,0	11,00	135	140	70	65	1183,7	93,8	233,8	10,4	2,9	84,6	87,7	13,4	14,4	12
	3,0	65,0	74,0	23,0	23,0	4,0	13,26	135	140	71	65	1423,7	115,0	284,2	10,4	2,9	101,5	105,7	16,3	17,6	12
	2,0	75,0	81,0	23,0	23,0	3,0	9,19	136	139	79	75	1023,3	107,4	236,8	10,6	3,4	73,5	75,4	13,6	14,3	14
	2,5	75,0	82,0	22,0	22,0	4,0	11,46	135	140	79	75	1270,6	131,3	291,3	10,5	3,4	91,1	93,8	16,6	17,5	14
	3,0	75,0	83,0	23,0	23,0	4,0	13,82	135	140	80	75	1528,0	160,7	353,8	10,5	3,4	109,3	113,1	20,1	21,4	14
300	2,0	65,0	71,0	23,0	23,0	3,0	9,29	148	152	69	65	1170,9	75,3	205,8	11,2	2,8	77,1	79,1	10,9	11,6	10
	2,5	65,0	73,0	22,0	22,0	4,0	11,61	147	153	70	65	1458,8	93,9	255,9	11,2	2,8	95,7	98,9	13,4	14,4	10
	3,0	65,0	74,0	23,0	23,0	4,0	14,00	147	153	71	65	1755,3	115,1	311,2	11,2	2,9	114,9	119,3	16,2	17,7	10
	2,0	75,0	81,0	23,0	23,0	3,0	9,68	148	152	79	75	1257,9	107,4	259,2	11,4	3,3	82,9	84,9	13,6	14,3	12
	2,5	75,0	82,0	22,0	22,0	4,0	12,08	148	152	79	75	1562,5	131,4	318,8	11,4	3,3	102,7	105,7	16,6	17,5	12
	3,0	75,0	83,0	23,0	23,0	4,0	14,56	148	152	80	75	1879,6	160,8	387,3	11,4	3,3	123,3	127,4	20,1	21,4	12
	2,0	92,0	100,0	31,0	31,0	3,0	10,69	148	152	97	93	1460,4	212,1	405,1	11,7	4,5	95,9	98,9	21,8	22,8	16
	2,5	92,0	100,0	30,0	30,0	4,0	13,33	148	152	97	93	1813,4	258,3	497,7	11,7	4,4	119,2	122,7	26,6	27,9	16
	3,0	92,0	100,0	31,0	31,0	4,0	16,04	148	152	97	92	2173,3	310,5	597,5	11,6	4,4	142,8	147,1	32,1	33,6	16
350	2,0	75,0	81,0	23,0	23,0	3,0	10,66	173	177	79	75	1819,4	107,4	303,9	13,1	3,2	102,9	105,1	13,6	14,3	10
	2,5	75,0	82,0	22,0	22,0	4,0	13,31	173	177	79	75	2261,3	131,4	373,8	13,0	3,1	127,6	130,9	16,5	17,5	10
	3,0	75,0	83,0	23,0	23,0	4,0	16,04	172	178	80	75	2721,6	160,8	454,3	13,0	3,2	153,3	157,8	20,1	21,5	10
	2,0	92,0	100,0	31,0	31,0	3,0	11,67	173	177	97	93	2099,4	212,1	475,9	13,4	4,3	118,3	121,7	21,8	22,9	13
	2,5	92,0	100,0	30,0	30,0	4,0	14,56	173	177	97	92	2608,5	258,3	584,6	13,4	4,2	147,1	151,1	26,6	28,0	13
	3,0	92,0	100,0	31,0	31,0	4,0	17,52	173	177	97	92	3128,4	310,5	702,2	13,4	4,2	176,4	181,2	32,1	33,7	13
400	2,0	75,0	81,0	23,0	23,0	3,0	11,64	198	202	79	75	2514,2	107,4	348,6	14,7	3,0	124,5	127,0	13,6	14,3	8
	2,5	75,0	82,0	22,0	22,0	4,0	14,54	198	202	80	75	3126,4	131,4	428,8	14,7	3,0	154,5	158,2	16,5	17,5	8
	3,0	75,0	83,0	23,0	23,0	4,0	17,52	197	203	80	75	3764,1	160,9	521,3	14,7	3,0	185,7	190,8	20,1	21,5	8
	2,0	92,0	100,0	31,0	31,0	3,0	12,66	198	202	97	93	2887,2	212,9	548,2	15,1	4,1	142,6	146,2	21,9	23,0	11
	2,5	92,0	100,0	30,0	30,0	4,0	15,79	198	202	97	92	3585,6	258,4	671,5	15,1	4,0	177,1	181,5	26,6	28,0	11
	3,0	92,0	100,0	31,0	31,0	4,0	19,00	198	202	97	92	4302,5	310,6	806,8	15,0	4,0	212,5	217,8	32,0	33,8	11

tab. 5.2

h height of profile
t thickness of wall
b_W width of narrow flange
b_S width of wide flange
c_1 height of wide flange stiffener
c_2 height of narrow flange stiffener
r inner radius of bend
A cross-sectional area of the profile
η, ξ central principal axes of cross-section
α angle between the XY primary axis system and the principal axis system

y_S distance of the centre of gravity from wide flange outermost fibres
y_W distance of the centre of gravity from narrow flange outermost fibres
x_{Ld} istance of the centre of gravity from C1 stiffener outermost fibres
x_P distance of the centre of gravity from C2 stiffener outermost fibres
i_X moment of inertia of cross-section in relation to the X axis
I_Y moment of inertia of cross-section in relation to the Y axis
I_{XY} deviating (centrifugal) moment
i_X radius of inertia of cross-section in relation to the X axis
i_Y radius of inertia of cross-section in relation to the Y axis
W_{XG} strength index for upper flange outermost fibres in relation to the X axis
W_{XD} strength index for lower flange outermost fibres in relation to the X axis
W_{YL} strength index for C1 stiffener outermost fibres ref. to the Y axis
W_{YP} strength index for C2 stiffener outermost fibres in relation to the Y axis

The calculations include nominal dimensions in accordance with EN 1993-1-1 sec. 3.2.5 (3).
With the design thickness applied in accordance with EN $_{19}93$-$_{1-3}$ sec $_{.3.}2.4_{(3)}$ $t_{cor} = t_{nom} - t_{zinc}$; t_{zinc} = 0.04 mm for a typical zinc coating (Z275)

Z-shaped section bar

used to form continuous beams

Purlins can be formed into continuous, multi-span beams with overlaps at their suports. To make such overlaps, flanges with varied width and adequate hole pattern are applied. Upper flanges of purlins should face towards the ridge.

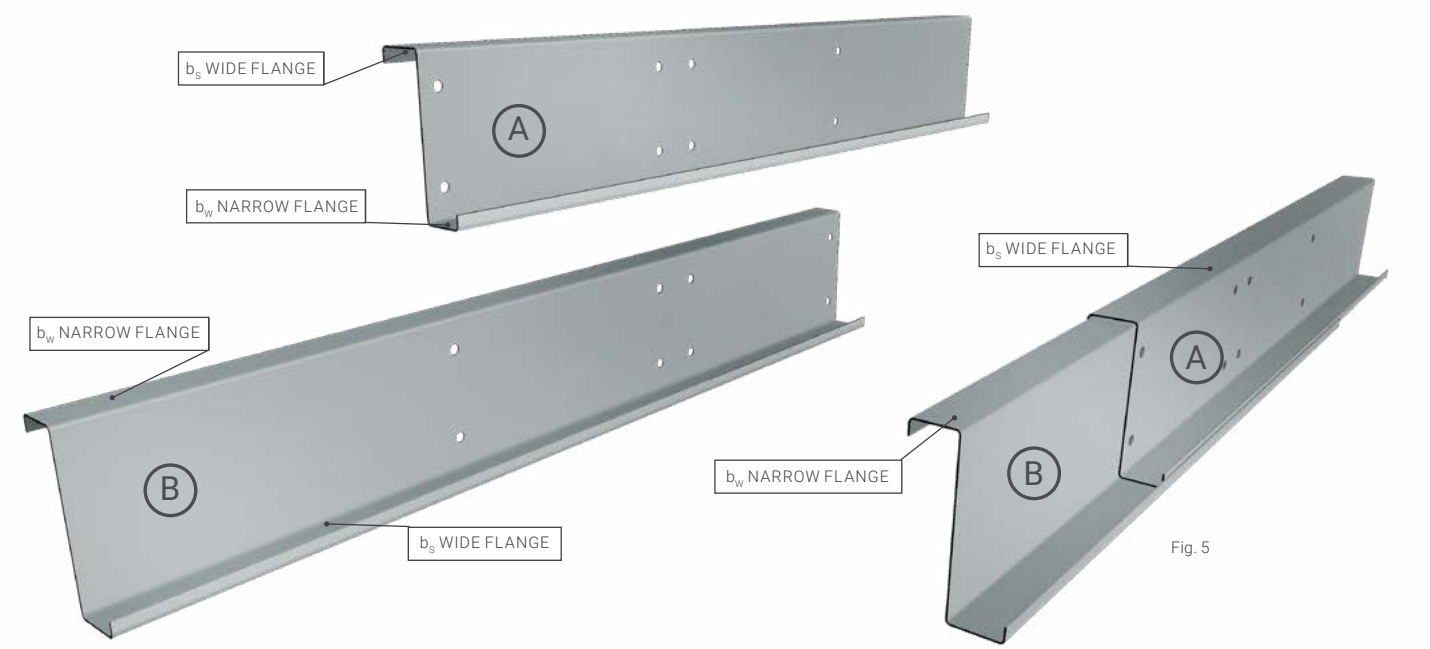

Fig. 5

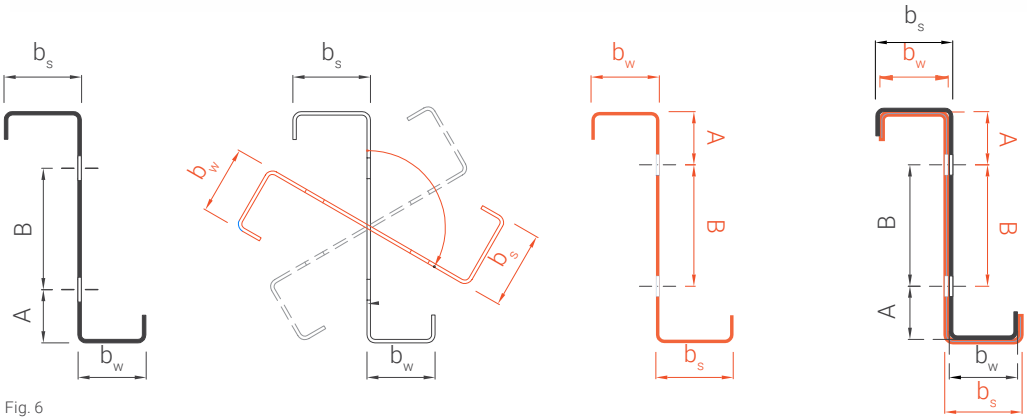

Fig. 6

CROSS-SECTION	A [mm]	B [mm]	C [mm]	D [mm]
Z 100x...	46	-	55	90
Z 150x...	46	55	55	145
Z 175x...	46	80	55	170
Z 200x...	46	105	55	195
Z 225x...	46	130	55	220
Z 250x...	46	155	55	245
Z 275x...	46	180	55	270
Z 300x...	46	205	55	295
Z 350x...	46	255	55	345
Z 400x...	46	305	55	395

tab. 6

Connection sheets

EXAMPLE OF FASTENING WITH A CONNECTION PLATE

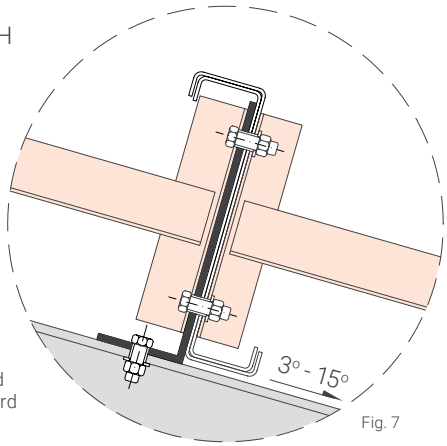

Fig. 7

- drill Ø18 holes
- E - 60 mm as standard
- t_{BL}* - 6 mm as standard

*if D ≥ 245 - extra bracing of the connector with a vertical rib is required

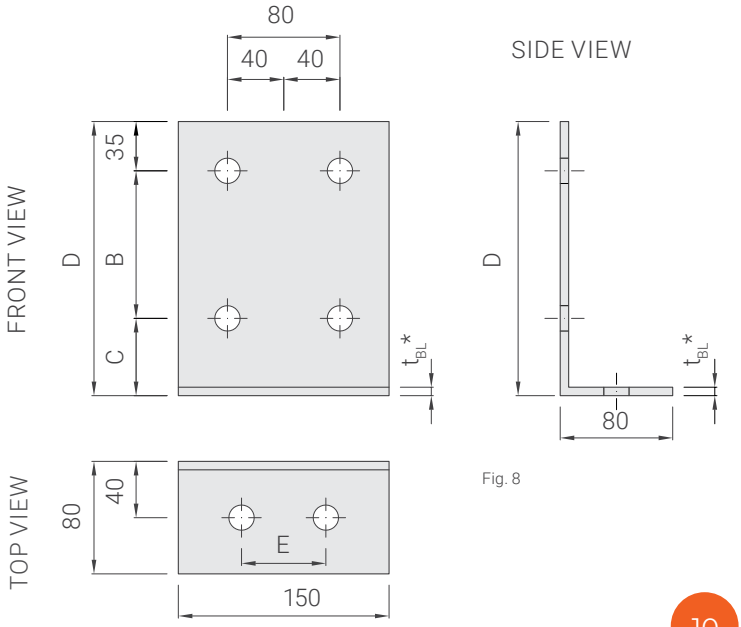

Fig. 8

Z-shaped section bar

Hole pattern

Standard hole pattern for purlins

CROSS-SECTION

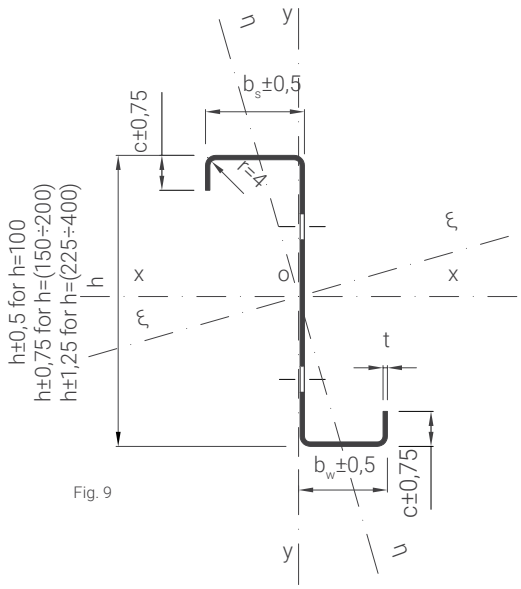

Fig. 9

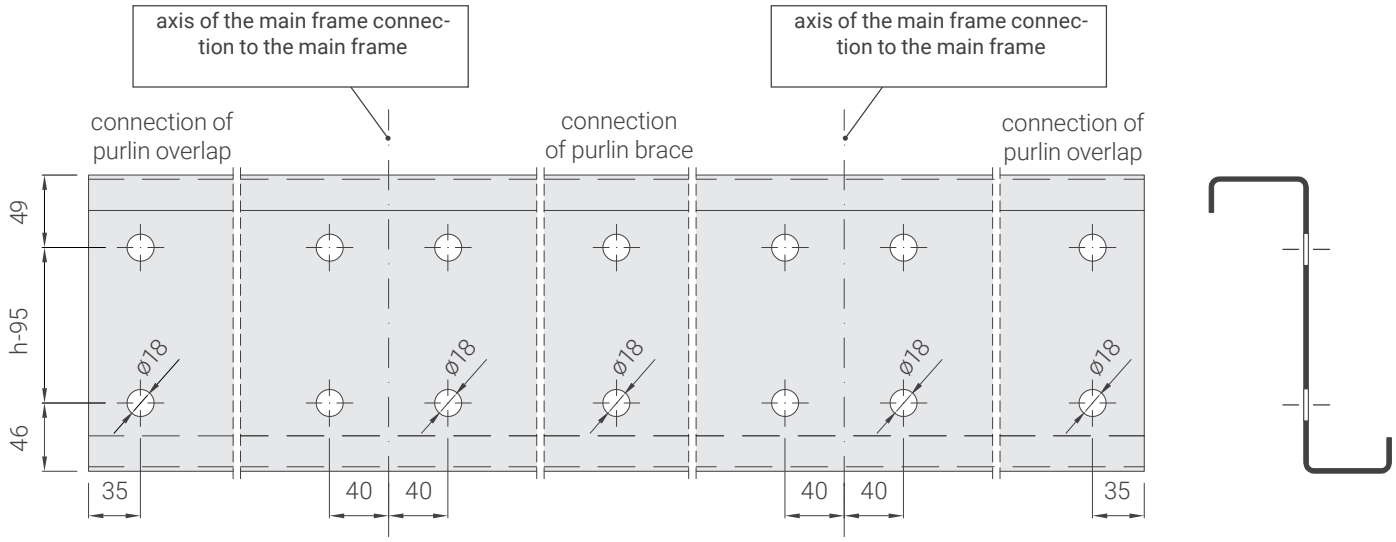

Fig. 10

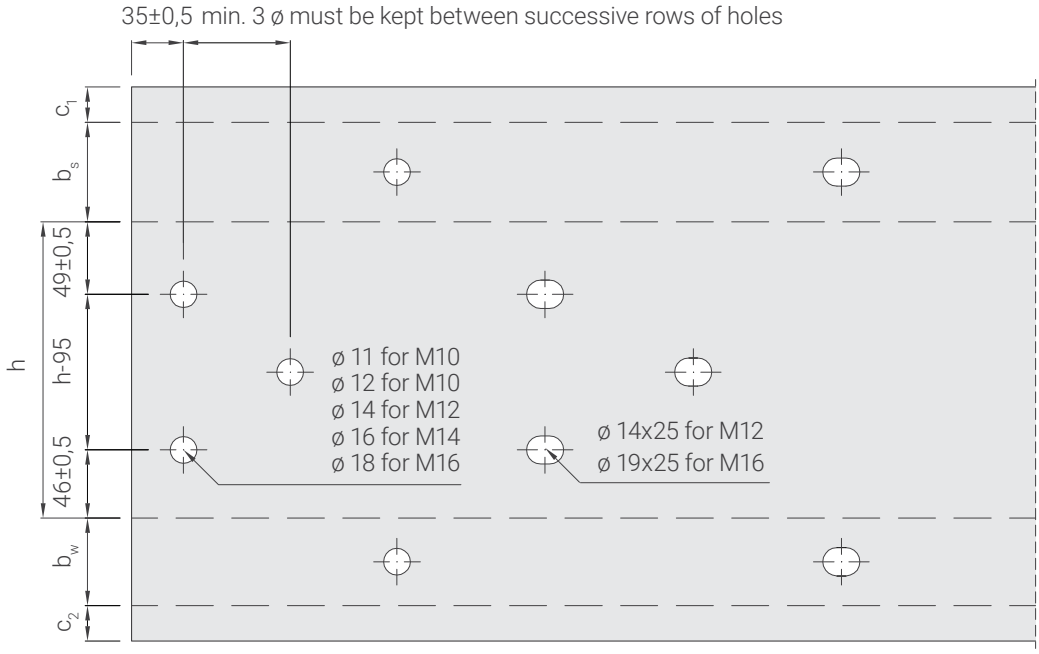

Fig. 11

Other hole patterns* expanded view

Extra holes at the height of an individual section bar can be made, if they are spaced at min. 3 ø.

*any hole design and diameters other than the one(s) shown on the drawing - to be agreed

Z-shaped section bar

used to form purlins

Construction diagram for purlins

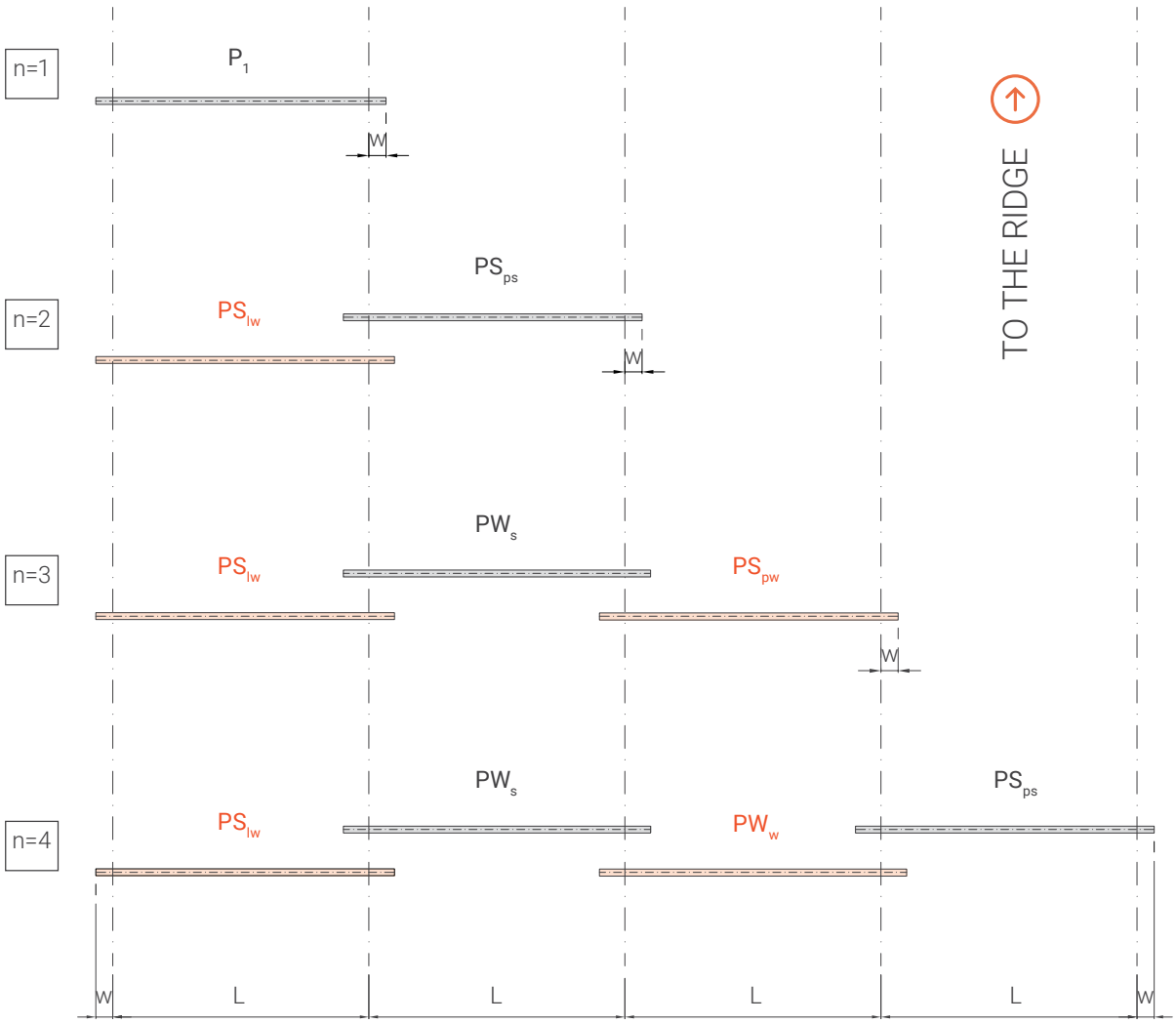

Fig. 12

COMMENTS	1. A purlin with n>4 spans is made by adding PW_w and PW_s in the middle. 2. An even number of spans starts with PS lw and ends with PS_{ps} . 3. An odd number of spans starts with PS_{lw} and ends with PS_{pw} . 4. Bracket “W” - as designed for a specific plant hall.

Z-shaped section bar

used to form purlins

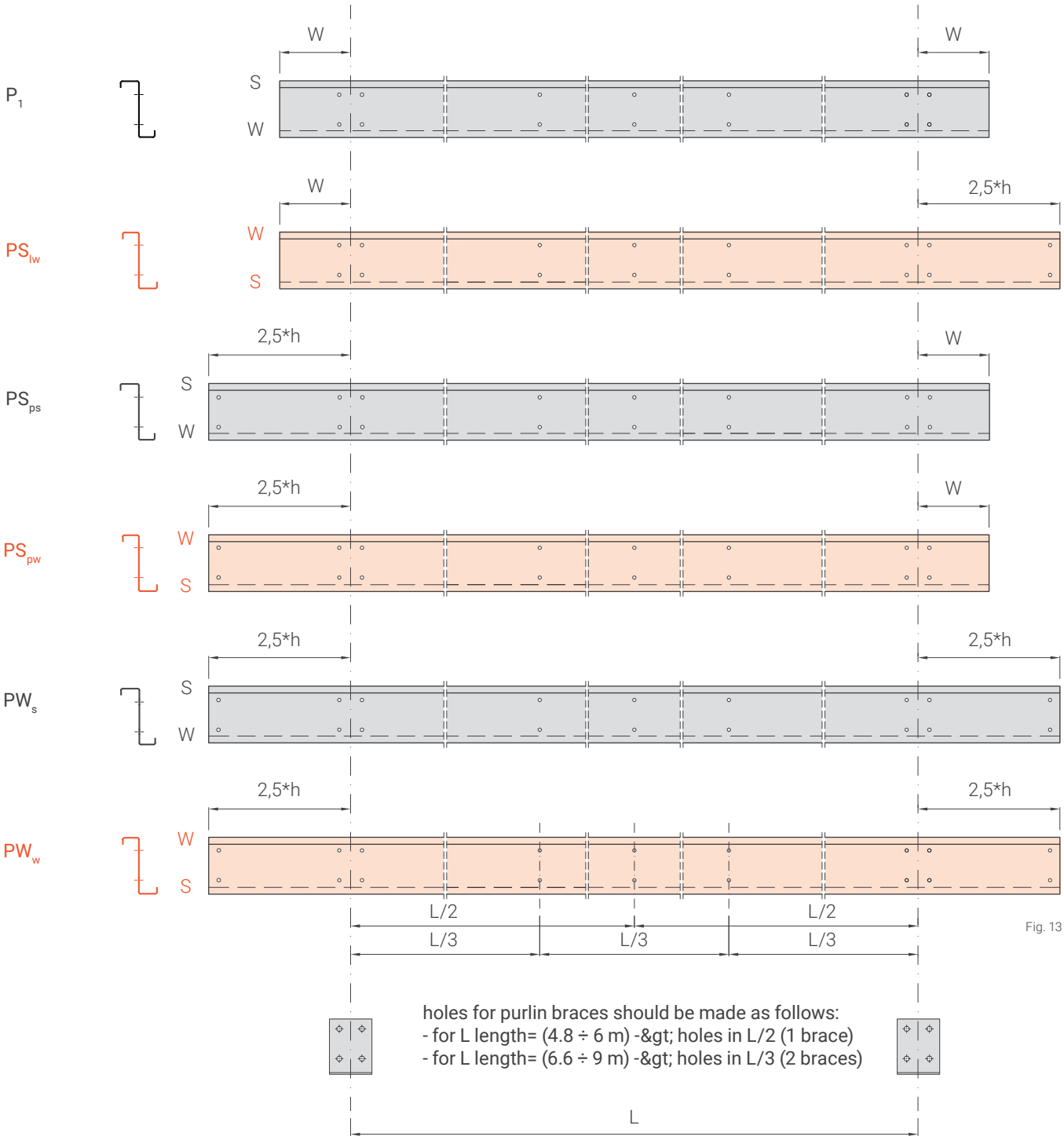

Fig. 13

LEGEND		
	P1 -Single-span purlin	l - Left purlin
	PS - Outermost purlin	p - Right purlin
	PW - Inner purlin	w - Narrow upper flange
	W - Bracket	s - Wide upper flange

Z-shaped section bar

braces for purlins

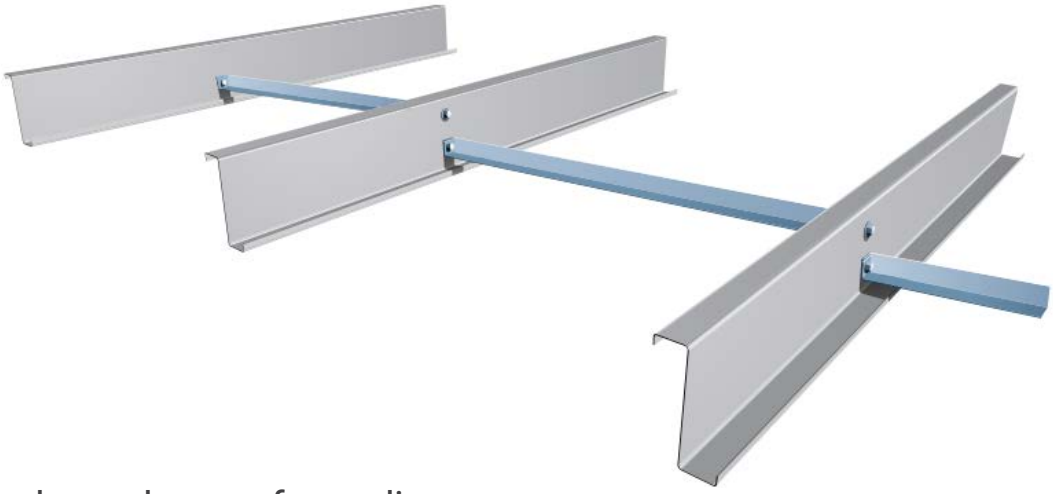

Rod-core braces for purlins

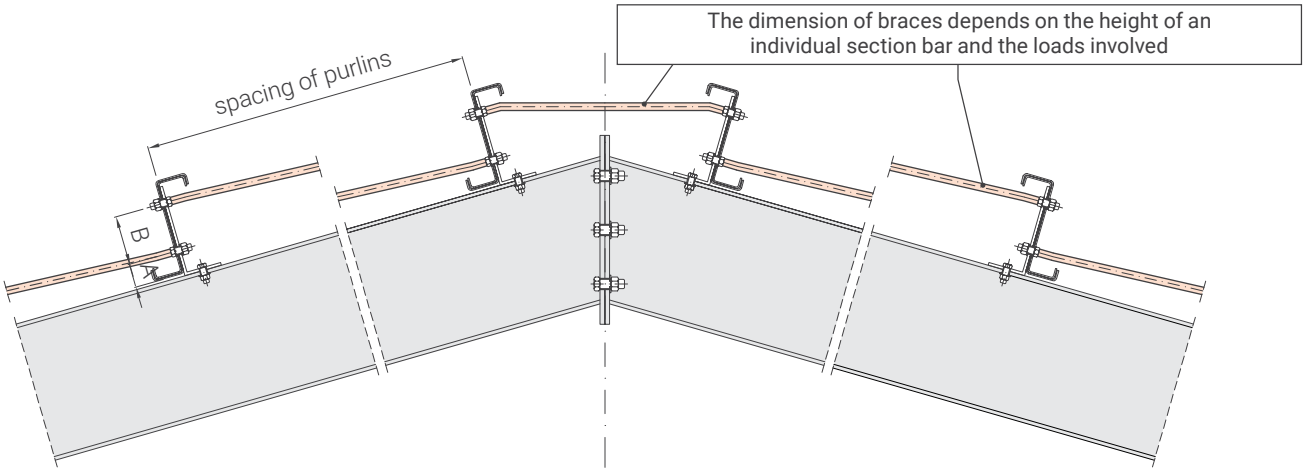

Fig. 14

Angled braces for purlins

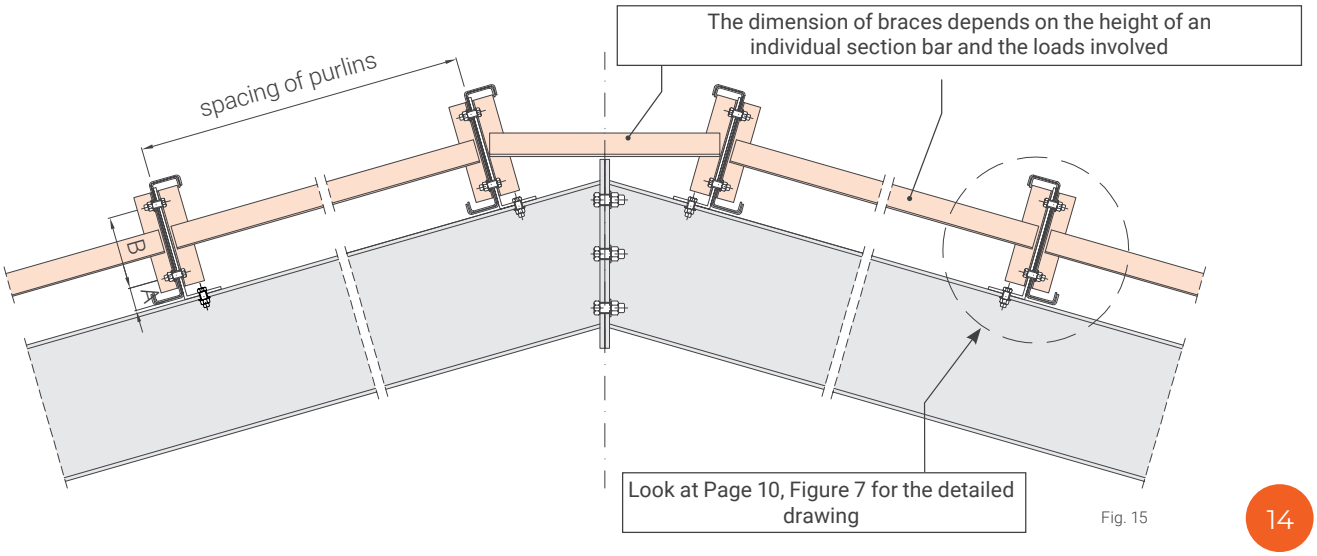

Fig. 15

C-shaped section bar

cross-section geometry

The section bars on offer are labelled with the B construction mark. The production program - commonly used for purlins and transoms in steel halls.

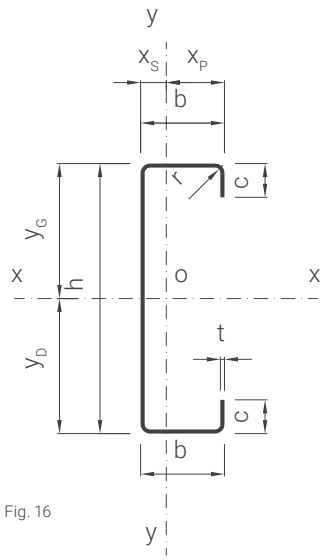

Fig. 16

Table of geometric specification for cross-sections

h	t	b	c	r	A	y_G	y_D	x_S	x_P	I_X	I_Y	I_{XY}	i_X	i_Y	W_{XD}	W_{XG}	W_{YS}	W_{YP}
[mm]	[mm]	[mm]	[mm]	[mm]	[cm²]	[mm]	[mm]	[mm]	[mm]	[cm⁴]	[cm⁴]	[cm⁴]	[cm]	[cm]	[cm³]	[cm³]	[cm³]	[cm³]
100	1,5	51,0	17,0	3,0	3,36	50	50	18	33	54,8	13,0	0,0	4,0	2,0	11,0	11,0	7,1	4,0
	2,0	52,0	17,0	3,0	4,51	50	50	19	33	73,1	17,7	0,0	4,0	2,0	14,6	14,6	9,4	5,3
	2,5	51,0	17,0	4,0	5,56	50	50	18	33	88,8	20,6	0,0	4,0	1,9	17,8	17,8	11,2	6,3
	1,5	59,0	23,0	3,0	3,77	50	50	23	35	62,1	20,5	0,0	4,1	2,3	12,4	12,4	8,7	5,8
	2,0	60,0	24,0	3,0	5,10	50	50	24	36	83,0	28,4	0,0	4,0	2,4	16,6	16,6	11,7	7,9
	2,5	60,0	23,0	4,0	6,30	50	50	24	36	102,0	34,2	0,0	4,0	2,3	20,4	20,4	14,3	9,5
150	1,5	51,0	17,0	3,0	4,09	75	75	15	36	140,4	14,8	0,0	5,9	1,9	18,7	18,7	9,7	4,2
	2,0	52,0	17,0	3,0	5,49	75	75	16	36	187,7	20,3	0,0	5,8	1,9	25,0	25,0	13,0	5,6
	2,5	51,0	17,0	4,0	6,79	75	75	15	36	229,4	23,5	0,0	5,8	1,9	30,6	30,6	15,4	6,6
	1,5	59,0	23,0	3,0	4,50	75	75	20	39	158,6	23,7	0,0	5,9	2,3	21,1	21,1	12,0	6,0
	2,0	60,0	24,0	3,0	6,08	75	75	20	40	213,1	32,8	0,0	5,9	2,3	28,4	28,4	16,1	8,3
	2,5	60,0	23,0	4,0	7,53	75	75	20	40	262,4	39,5	0,0	5,9	2,3	35,0	35,0	19,5	9,9
175	1,5	51,0	17,0	3,0	4,45	87	87	14	37	201,8	15,6	0,0	6,7	1,9	23,1	23,1	11,1	4,2
	2,0	52,0	17,0	3,0	5,98	87	87	14	38	270,0	21,2	0,0	6,7	1,9	30,9	30,9	14,7	5,7
	2,5	51,0	17,0	4,0	7,40	87	87	14	37	330,5	24,7	0,0	6,7	1,8	37,8	37,8	17,5	6,7
	1,5	59,0	23,0	3,0	4,86	87	87	18	41	227,3	24,9	0,0	6,8	2,3	26,0	26,0	13,6	6,1
	2,0	60,0	24,0	3,0	6,57	87	87	19	41	305,8	34,6	0,0	6,8	2,3	35,0	35,0	18,2	8,4
	2,5	60,0	23,0	4,0	8,14	87	87	19	41	376,9	41,5	0,0	6,8	2,3	43,1	43,1	22,1	10,1
200	1,5	51,0	17,0	3,0	4,82	100	100	13	38	277,0	16,1	0,0	7,6	1,8	27,7	27,7	12,4	4,3
	2,0	52,0	17,0	3,0	6,47	100	100	13	39	371,0	22,0	0,0	7,6	1,8	37,1	37,1	16,4	5,7
	2,5	51,0	17,0	4,0	8,02	100	100	13	38	454,8	25,6	0,0	7,5	1,8	45,5	45,5	19,5	6,8
	3,0	52,0	17,0	4,0	9,65	100	100	14	38	545,8	31,3	0,0	7,5	1,8	54,6	54,6	23,2	8,2
	1,5	59,0	23,0	3,0	5,23	100	100	17	42	311,3	26,0	0,0	7,7	2,2	31,1	31,1	15,2	6,2
	2,0	60,0	24,0	3,0	7,06	100	100	18	42	419,1	36,0	0,0	7,7	2,3	41,9	41,9	20,3	8,5
	2,5	60,0	23,0	4,0	8,76	100	100	18	42	516,9	43,3	0,0	7,7	2,2	51,7	51,7	24,7	10,2
	3,0	62,0	23,0	4,0	10,60	100	100	18	44	626,0	54,9	0,0	7,7	2,3	62,6	62,6	30,0	12,6
225	1,5	59,0	23,0	3,0	5,59	112	112	16	43	411,6	26,9	0,0	8,6	2,2	36,6	36,6	16,8	6,3
	2,0	60,0	24,0	3,0	7,55	112	112	17	43	554,4	37,3	0,0	8,6	2,2	49,3	49,3	22,4	8,6
	2,5	60,0	23,0	4,0	9,37	112	112	16	43	684,2	44,8	0,0	8,5	2,2	60,8	60,8	27,2	10,3
	3,0	62,0	23,0	4,0	11,34	112	112	17	45	828,7	56,9	0,0	8,5	2,2	73,7	73,7	33,1	12,7
	1,5	65,0	25,0	3,0	5,83	112	112	19	46	438,0	35,0	0,0	8,7	2,5	38,9	38,9	18,8	7,5
	2,0	66,0	25,0	3,0	7,82	112	112	19	47	586,6	47,6	0,0	8,7	2,5	52,2	52,2	25,1	10,1
	2,5	66,0	25,0	4,0	9,77	112	112	19	47	728,4	58,4	0,0	8,6	2,4	64,8	64,8	30,7	12,4
	3,0	67,0	25,0	4,0	11,75	112	112	19	48	874,4	71,1	0,0	8,6	2,5	77,7	77,7	36,7	15,0
	2,0	74,0	27,0	3,0	8,21	112	112	22	52	631,5	64,3	0,0	8,8	2,8	56,1	56,1	28,9	12,5
	2,5	73,0	27,0	4,0	10,21	112	112	22	51	778,4	76,6	0,0	8,7	2,7	69,2	69,2	34,9	15,0
	3,0	74,0	28,0	4,0	12,34	112	112	23	51	938,6	94,8	0,0	8,7	2,8	83,4	83,4	41,9	18,4

tab. 7.1

Continued table on the next page

h	t	b	c	r	A	y_G	y_D	x_S	x_P	I_X	I_Y	I_{XY}	i_X	i_Y	W_{XD}	W_{XG}	W_{YS}	W_{YP}
[mm]	[mm]	[mm]	[mm]	[mm]	[cm²]	[mm]	[mm]	[mm]	[mm]	[cm⁴]	[cm⁴]	[cm⁴]	[cm]	[cm]	[cm³]	[cm³]	[cm³]	[cm³]
250	1,5	59,0	23,0	3,0	5,96	125	125	15	44	529,3	27,7	0,0	9,4	2,2	42,4	42,4	18,3	6,3
	2,0	60,0	24,0	3,0	8,04	125	125	16	44	713,2	38,4	0,0	9,4	2,2	57,1	57,1	24,5	8,7
	2,5	60,0	23,0	4,0	9,99	125	125	16	44	880,8	46,2	0,0	9,4	2,1	70,5	70,5	29,7	10,4
	3,0	62,0	23,0	4,0	12,08	125	125	16	46	1066,8	58,6	0,0	9,4	2,2	85,4	85,4	36,1	12,8
	1,5	65,0	25,0	3,0	6,19	125	125	18	47	562,3	36,1	0,0	9,5	2,4	45,0	45,0	20,6	7,6
	2,0	66,0	25,0	3,0	8,31	125	125	18	48	753,4	49,1	0,0	9,5	2,4	60,3	60,3	27,4	10,2
	2,5	66,0	25,0	4,0	10,38	125	125	18	48	936,1	60,2	0,0	9,5	2,4	74,9	74,9	33,6	12,5
	3,0	67,0	25,0	4,0	12,49	125	125	18	49	1124,0	73,4	0,0	9,5	2,4	89,9	89,9	40,1	15,1
	2,0	74,0	27,0	3,0	8,70	125	125	21	53	809,3	66,4	0,0	9,6	2,8	64,8	64,8	31,5	12,6
	2,5	73,0	27,0	4,0	10,82	125	125	21	52	998,4	79,1	0,0	9,6	2,7	79,9	79,9	38,1	15,2
	3,0	74,0	28,0	4,0	13,08	125	125	21	53	1204,4	97,9	0,0	9,6	2,7	96,4	96,4	45,7	18,6
275	2,0	60,0	24,0	3,0	8,53	137	137	15	45	897,2	39,5	0,0	10,3	2,2	65,3	65,3	26,6	8,7
	2,5	60,0	23,0	4,0	10,60	137	137	15	45	1108,6	47,3	0,0	10,2	2,1	80,6	80,6	32,2	10,5
	3,0	62,0	23,0	4,0	12,82	137	137	15	47	1342,6	60,1	0,0	10,2	2,2	97,7	97,7	39,1	12,9
	2,0	66,0	25,0	3,0	8,80	137	137	17	49	946,1	50,4	0,0	10,4	2,4	68,8	68,8	29,7	10,3
	2,5	66,0	25,0	4,0	11,00	137	137	17	49	1176,1	61,8	0,0	10,3	2,4	85,5	85,5	36,4	12,6
	3,0	67,0	25,0	4,0	13,23	137	137	17	50	1412,6	75,4	0,0	10,3	2,4	102,7	102,7	43,4	15,2
	2,0	74,0	27,0	3,0	9,19	137	137	20	54	1014,2	68,3	0,0	10,5	2,7	73,8	73,8	34,1	12,7
	2,5	73,0	27,0	4,0	11,44	137	137	20	53	1252,3	81,3	0,0	10,5	2,7	91,1	91,1	41,2	15,3
	3,0	74,0	28,0	4,0	13,82	137	137	20	54	1511,1	100,7	0,0	10,5	2,7	109,9	109,9	49,5	18,8
300	2,0	66,0	25,0	3,0	9,29	150	150	16	50	1166,3	51,6	0,0	11,2	2,4	77,8	77,8	32,0	10,3
	2,5	66,0	25,0	4,0	11,61	150	150	16	50	1450,5	63,3	0,0	11,2	2,3	96,7	96,7	39,1	12,7
	3,0	67,0	25,0	4,0	13,97	150	150	17	50	1742,6	77,1	0,0	11,2	2,3	116,2	116,2	46,7	15,3
	2,0	74,0	27,0	3,0	9,68	150	150	19	55	1247,9	70,0	0,0	11,4	2,7	83,2	83,2	36,7	12,7
	2,5	73,0	27,0	4,0	12,05	150	150	19	54	1541,9	83,3	0,0	11,3	2,6	102,8	102,8	44,4	15,4
	3,0	74,0	28,0	4,0	14,56	150	150	19	55	1861,0	103,2	0,0	11,3	2,7	124,1	124,1	53,2	18,9
	2,0	97,0	30,0	3,0	10,70	150	150	28	69	1465,5	138,8	0,0	11,7	3,6	97,7	97,7	50,3	20,0
	2,5	96,0	30,0	4,0	13,33	150	150	27	69	1814,1	167,3	0,0	11,7	3,5	121,0	121,0	61,3	24,4
	3,0	97,0	30,0	4,0	16,04	150	150	28	69	2178,7	203,0	0,0	11,7	3,6	145,3	145,3	73,4	29,3
350	2,0	74,0	27,0	3,0	10,66	175	175	17	57	1807,6	72,9	0,0	13,0	2,6	103,3	103,3	41,9	12,9
	2,5	73,0	27,0	4,0	13,28	175	175	17	56	2236,0	86,8	0,0	13,0	2,6	127,8	127,8	50,6	15,6
	3,0	74,0	28,0	4,0	16,04	175	175	18	56	2699,7	107,5	0,0	13,0	2,6	154,3	154,3	60,6	19,1
	2,0	97,0	30,0	3,0	11,68	175	175	25	72	2105,8	145,2	0,0	13,4	3,5	120,3	120,3	57,2	20,3
	2,5	96,0	30,0	4,0	14,56	175	175	25	71	2609,3	174,9	0,0	13,4	3,5	149,1	149,1	69,8	24,7
	3,0	97,0	30,0	4,0	17,52	175	175	25	72	3134,8	212,3	0,0	13,4	3,5	179,2	179,2	83,4	29,7
400	2,0	74,0	27,0	3,0	11,64	200	200	16	58	2500,6	75,3	0,0	14,7	2,5	125,0	125,0	47,1	13,0
	2,5	73,0	27,0	4,0	14,51	200	200	16	57	3096,1	89,6	0,0	14,6	2,5	154,8	154,8	56,7	15,7
	3,0	74,0	28,0	4,0	17,52	200	200	16	58	3738,9	111,1	0,0	14,6	2,5	187,0	187,0	67,9	19,3
	2,0	97,0	30,0	3,0	12,66	200	200	23	73	2892,3	150,6	0,0	15,1	3,4	144,6	144,6	64,1	20,5
	2,5	96,0	30,0	4,0	15,79	200	200	23	73	3586,5	181,4	0,0	15,1	3,4	179,3	179,3	78,1	24,9
	3,0	97,0	30,0	4,0	19,00	200	200	24	73	4310,0	220,2	0,0	15,1	3,4	215,5	215,5	93,3	30,0

tab. 7.2

h height of profile
t thickness of wall
b_W width of narrow flange
b_S width of wide flange
c_1 height of wide flange stiffener
c_2 height of narrow flange stiffener
r inner radius of bend
A cross-sectional area of the profile
η, ξ centralne osie główne przekroju
α angle between the XY primary axis system and the principal axis system

y_S distance of the centre of gravity from wide flange outermost fibres
y_W distance of the centre of gravity from narrow flange outermost fibres
x_{Ld} istance of the centre of gravity from C1 stiffener outermost fibres
x_P distance of the centre of gravity from C2 stiffener outermost fibres
i_X moment of inertia of cross-section in relation to the X axis
I_Y moment of inertia of cross-section in relation to the Y axis
I_{XY} deviating (centrifugal) moment
i_X radius of inertia of cross-section in relation to the X axis
i_Y radius of inertia of cross-section in relation to the Y axis
W_{XG} strength index for upper flange outermost fibres in relation to the X axis
W_{XD} strength index for lower flange outermost fibres in relation to the X axis
W_{YL} strength index for C1 stiffener outermost fibres ref. to the Y axis
W_{YP} strength index for C2 stiffener outermost fibres in relation to the Y axis

The calculations include nominal dimensions in accordance with EN 1993-1-1 sec. 3.2.5 (3).
With the design thickness applied in accordance with EN 1993-1-3 sec. 3.2.4 (3) $t_{cor} = t_{nom} - t_{zinc}$; t_{zinc} = 0.04 mm for a typical zinc coating (Z275)

C-shaped section bar

used to form continuous beams

As for generally applied spans and loads for transoms, the structural equirements are kept in accordance with Table 7 on Page 15. Transoms can be formed into continuous, multi-span beams with overlaps at their supports. To make such overlaps, U-shaped profiles and adequate hole pattern are applied.

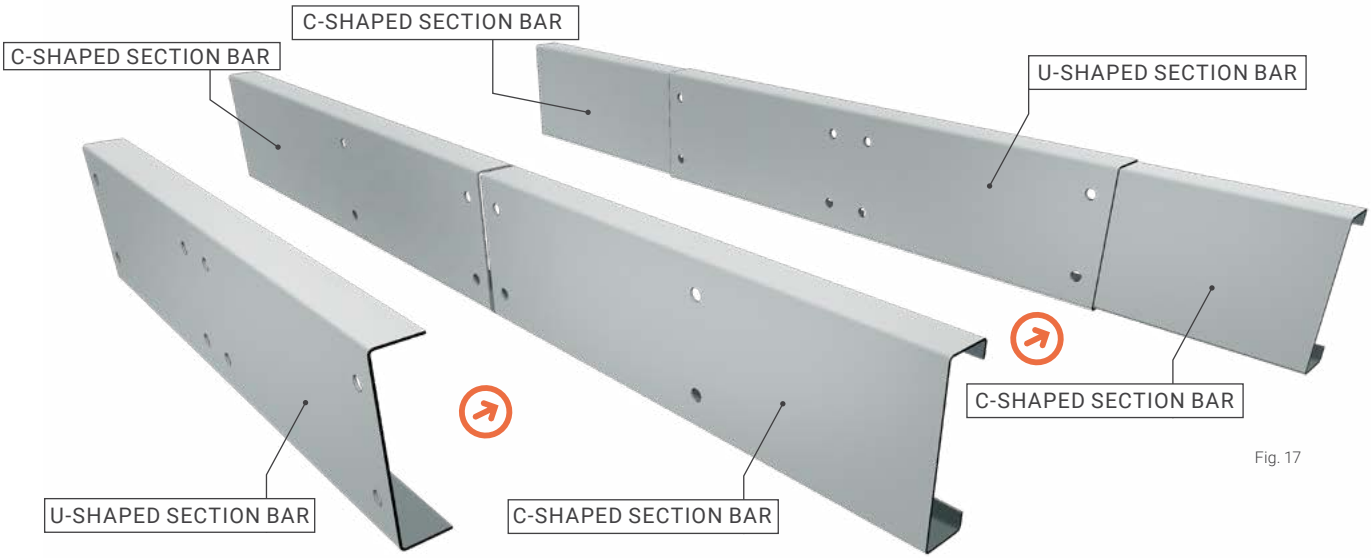

Fig. 17

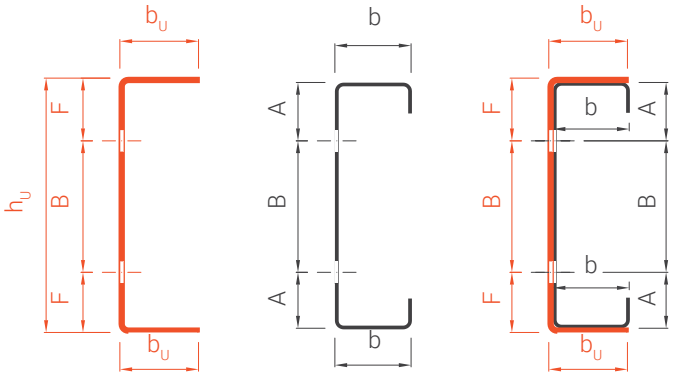

Fig. 18

CROSS-SECTION	h_U [mm]	b_U [mm]	t_U [mm]
U 100x...	106	zależne od szerokości „b"	2,5
U 150x...	156		2,5
U 175x...	181		2,5
U 200x...	207		3,0
U 225x...	232		3,0
U 250x...	257		3,0
U 275x...	282		3,0
U 300x...	307		3,0
U 350x...	357		3,0

tab. 8

CROSS-SECTION	A [mm]	B [mm]	C [mm]	D [mm]	F [mm]
C 100x...	47,5	-	55	90	50,5
C 150x...	47,5	55	55	145	50,5
C 175x...	47,5	80	55	170	50,5
C 200x...	47,5	105	55	195	51,0
C 225x...	47,5	130	55	220	51,0
C 250x...	47,5	155	55	245	51,0
C 275x...	47,5	180	55	270	51,0
C 300x...	47,5	205	55	295	51,0
C 350x...	47,5	255	55	345	51,0

tab. 9

Connection sheets

EXAMPLE OF FASTENING WITH
A CONNECTION PLATE

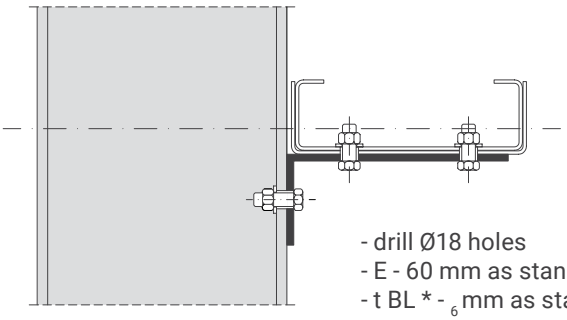

Fig. 19

- drill Ø18 holes
- E - 60 mm as standard
- t BL * - 6 mm as standard

*if D ≥ 245 - extra bracing of the connector with a vertical rib is required

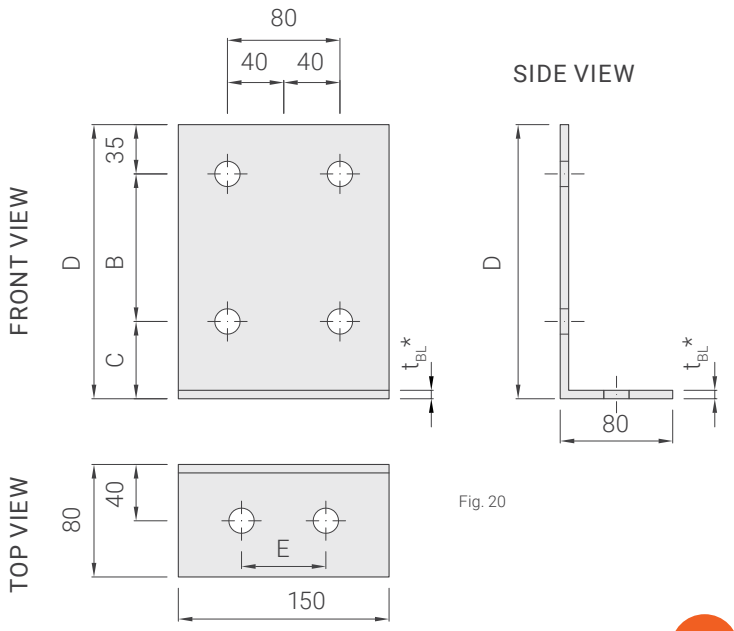

Fig. 20

C-shaped section bar

Hole pattern

Standard hole pattern for wall transoms

CROSS-SECTION

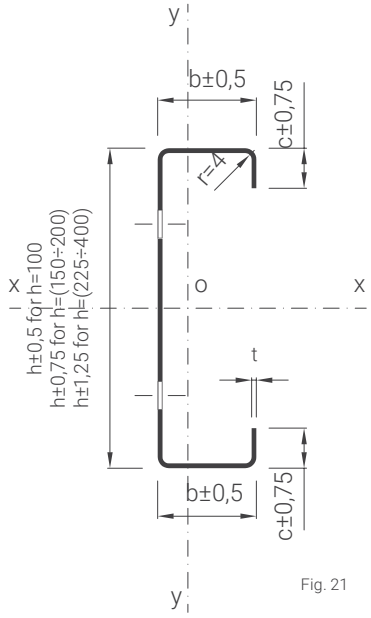

Fig. 21

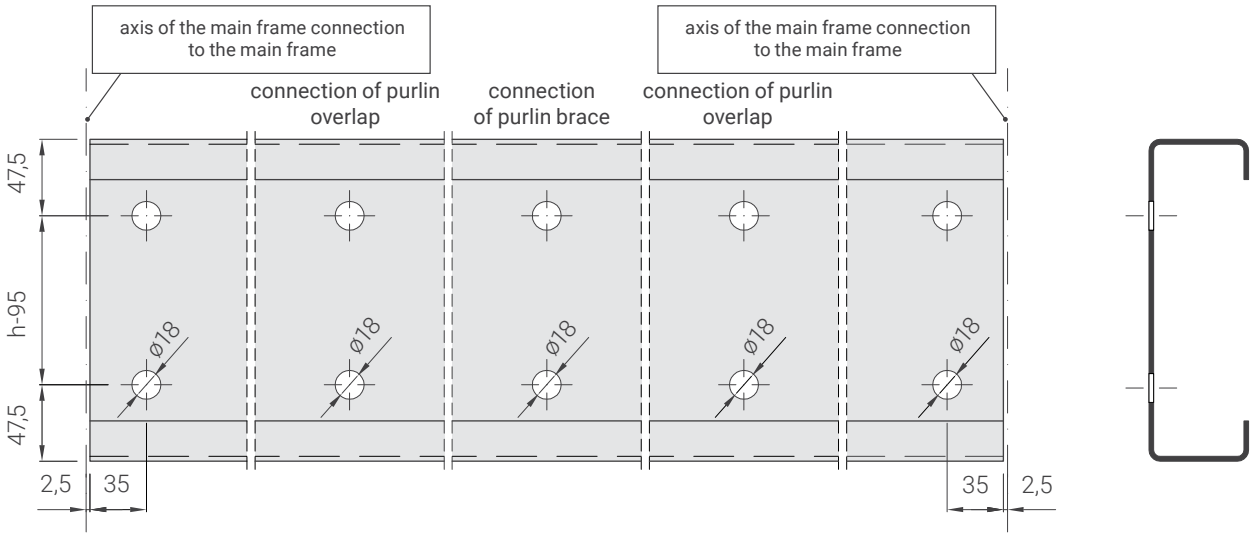

Fig. 22

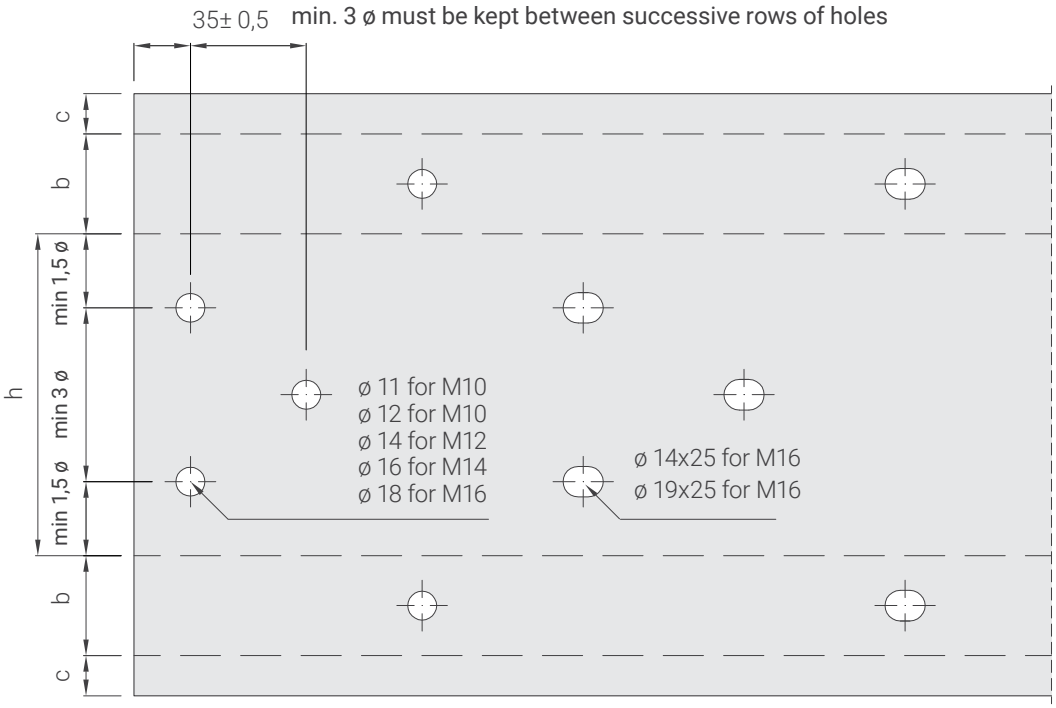

Fig. 23

Other hole patterns* expanded view

Extra holes at the height of an individual section bar can be made, if they are spaced at min. 3 ø.

*any hole design and diameters other than the one(s) shown on the drawing - to be agreed

Contact us!

www.izopanel.pl
tel. +48 58 340 17 17
bok@izopanel.pl

11/2023
Due to the vibrant development of business and potential technological changes, Izopanel reserves the right to make modifications to this catalogue without prior notice. The catalogue is not an offer as defined by par. 66 et seq. of the Civil Code. The Declarations of Performance and Technical Approvals (available on our website) are (unlike this publication, which is of an illustrative purpose) the only documents which thoroughly define and specify the declared performance levels of the products we offer. Status as of **11/2023**. The most up-to-date version of this catalogue in Polish is available on regular basis on our website. Our strength tables do not release structure designers from the obligation to perform verifiable static calculations in line with Polish construction law.